LEVELTEC

PROUDLY MANUFACTURED IN AUSTRALIA

# SLACK ROPE DETECTION SWITCH (VTS)

## VTS - VERTICAL TILT SWITCH (VTS)

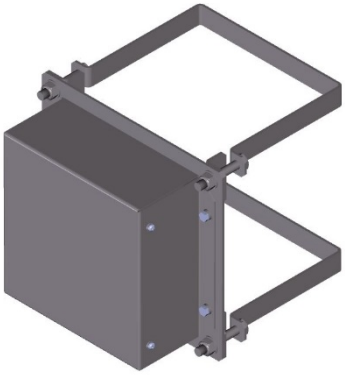

### RELIABLE. ECONOMICAL. ROBUST.

Safety and technology advancements are always changing the landscape of mining, making it crucial to be adaptable as a supplier. We encountered a need to further develop our Australian designed and manufactured tilt switches and resulted in the launch of the VTS tilt switch for slack rope detection.

## FEATURES & BENEFITS

- 316 Stainless steel construction prolonging wear in harsh mining environments
- Fully encapsulated preventing access to factory settings and maximum ingress protection
- Multiple Positive Break contacts for redundancy
- Stainless steel flexible conduit for cable protection 2m
- Fast switching in the event of tilt or hysteresis in ropes or plant.
- Dampened actuator in normal operation to reduce nuance tripping

**APPLICATIONS:**
Winders, Shaft Sinking Machines

*See over page for ordering information.*

LEVELTEC

PROUDLY MANUFACTURED IN AUSTRALIA

# VTS - VERTICAL TILT SWITCH

## TECHNICAL DATA

NOTE: STORE AND SHIP IN VERTICAL STATE.

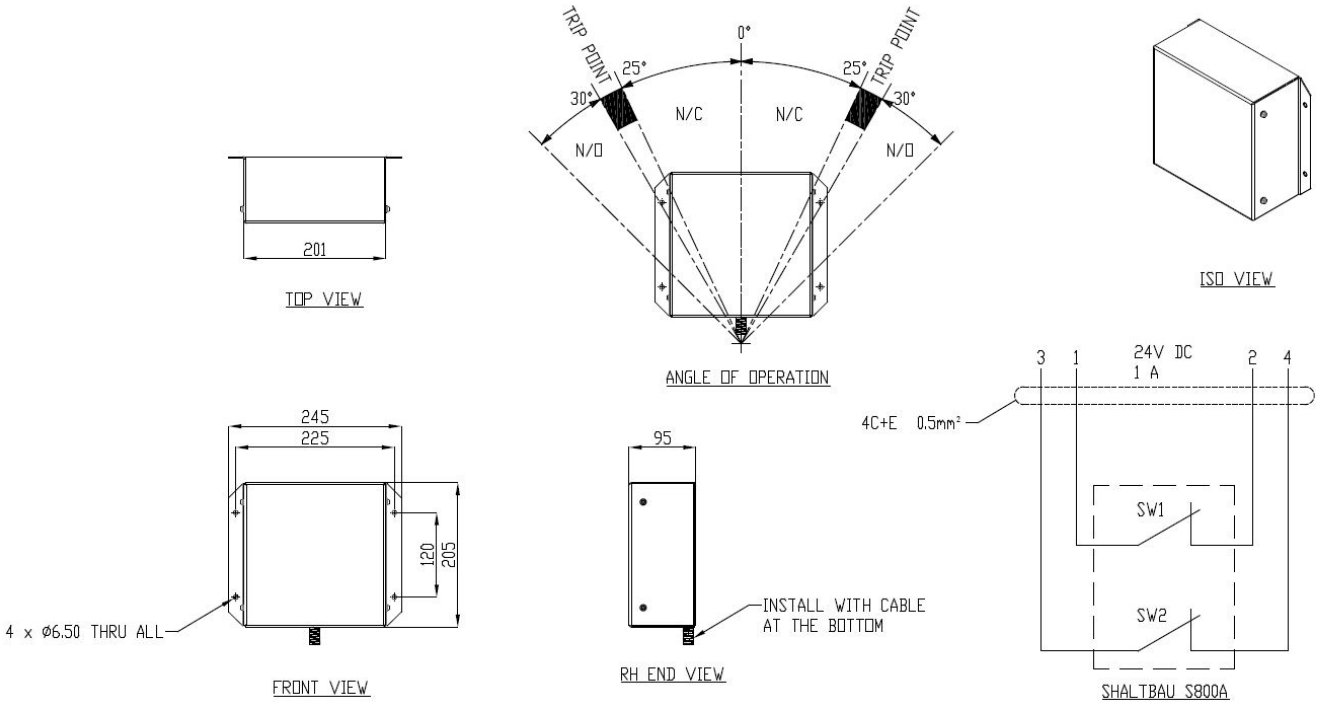


## ORDER DETAILS

**MODEL:**

Leveltec

Slack Rope Detection Switch (VTS)

VTS2-2/4

Part No.
LEV-VTS0010

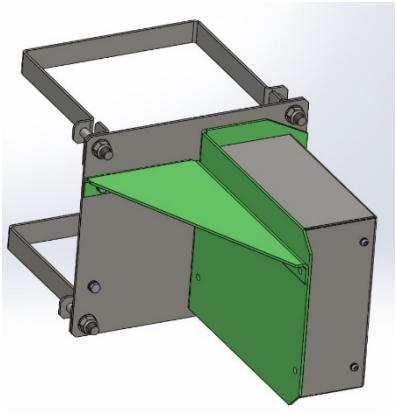

*NB. Mounting Bracket sold separately built for your application.*


**LEVELTEC ENGINEERING PTY. LTD.**
**Gloucester T** +61 2 6558 9264 | **Sydney T** +61 2 9299 5630 | **New Zealand T** +64 4 896 6285
**E** sales@leveltec.com.au **W** www.leveltec.com.au